DC101

Contacto Magnético Montagem Superfície - GAP: 1.5cm, 2 m cabo

DC101-Series

The DC101-Series surface mount magnetic contacts are designed for use in installations where a small, sealed unit is required. The reed switch is totally encapsulated in an exclusive polyurethane potting compound preventing moisture from entering the switch and causing false alarms.

Easy installation

The 16 mm standard gap distance allows for fast, easy installation and prevents false alarms from loose fitting doors. Recessed mounting holes make for clean-looking installations.

High Quality components and materials

Reed legs are plated with rhodium or ruthenium, and hermetically sealed in dry nitrogen. This offers superior protection against sticking and provides a moisture free environment therefore preventing corrosion.



Detalhes

- Comprehensive product range
- Convenient surface mounting
- Standard 2 m wire length
- Tamper loop provided
- Neat and tidy design

DC101

Contacto Magnético Montagem Superfície - GAP: 1.5cm, 2 m cabo

Especificações técnicas

General

Application type	Surface mount
Contact type	NC

Wired/wireless

Wired-wireless	Wired

Physical

Colour	White

Environmental

Mounting surface material	Ferrometal, Non-ferrometal

Regulatory

EN50131 grade	Grade 2

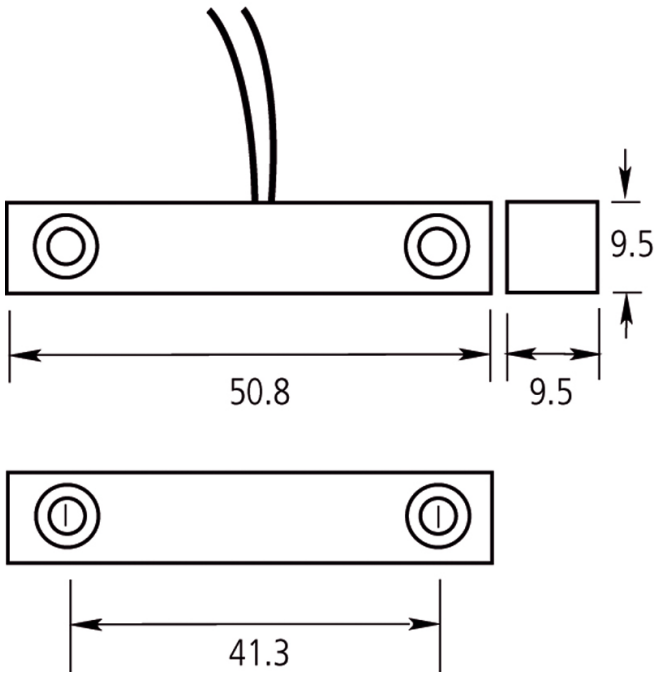

Como empresa de inovação, a Kidde Global Solutions reserva o direito de alterar as especificações do produto sem aviso prévio. Para obter informações sobre as especificações mais recentes do produto, visite pt.firesecurityproducts.com online ou contate o departamento comercial.

Last updated on 12 November 2026 - 18:57