ACA-CT-025

LHD Cable Accessory - Clip "T" - Pack of 25

General

The ACA-CT "T" clip is designed to secure LHD (linear heat detection) sensor cable. I may be used as a ceiling or wall mount clip.

The clip consists of a low density polyethylene resin moulding with a slot into which the heat sensing cable is located, combined with a 25 mm standoff. In ceiling applications the 25 mm standoff exposes the cable faster to any rise in temperature as it lifts the cable out of the layer of colder air that is often trapped against the ceiling.

Installation

The clip is secured with a screw and wall plug using an M8 pan head screw self tapping screw. For extra security a tie wrap may be used to prevent the cable from being pulled from the clip. A figure-8 configuration on the tie wrap is ideal for this.

Spacing for clips is recommended every meter along the length of the cable. Two clips in close proximity are used at 90 degrees bends or where the cable route changes direction.

For space protection applications the ideal location for the heat sensing cable is on the ceiling or the top of the sidewall. This ensures that the cable is rapidly exposed to the plume of hot gases from any event that may arise and spread across the ceiling.



Details

- Easy installation of linear heat cable
- For ceiling or wall mount applications
- Provides insulation and spacing from walls and ceilings
- Standard M4 fixing hole
- Available in quantities of 25

ACA-CT-025

LHD Cable Accessory - Clip "T" - Pack of 25

Technical specifications

Physical

Physical dimensions	30 x 12 x 31 mm (W x H x L)
Net weight	65 g 2.3 oz
Mounting type	Klipp på
Material (body)	Polyethylenharpiks med lav densitet

Environmental

Operating temperature	120°C / 248°F (peak melting temperature)
Environment	Indendør

Regulatory

Compliancy	RoHS

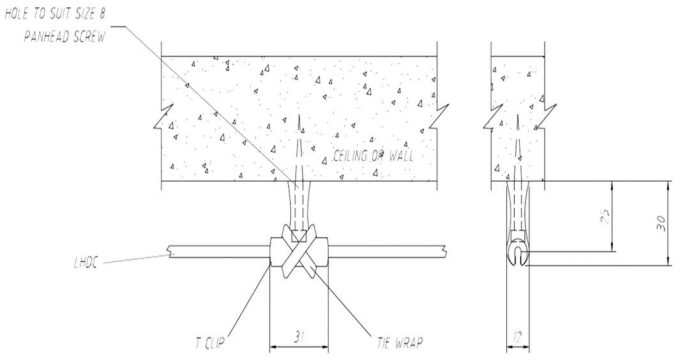

As a company of innovation, Kidde Global Solutions reserves the right to change product specifications without notice. For the latest product specifications, visit firesecurityproducts.com online or contact your sales representative.

Last updated on 30 July 2026 - 10:56