AB360-06

6" Fire Bell For Indoor Use, 24Vdc - Swedish

General

The AB360-06 is a 150 mm (6 inch) internal bell designed as an acoustic fire annunciator. Thanks to its small dimensions and overall design, it is ideal for in-door installation. The AB360-06 uses a 24 VDC supply and with the advantage of having very low current consumption, makes them compatible with most fire alarm systems on the market.

Applications

The AB360-06 is ideal for installing on any site, but are specifically good for installing on sites where a great number of bells are required. Because of the low current consumption, excessive power supplies can be avoided.

Construction

Designed for ease of installation, the AB360-06 features a robust steel gong. This ensures the reliable generation, of the universally recognizable fire alarm bell sound.



Details

- Suitable for indoor use
- Slim profile
- Low current consumption - 20mA
- Quick and easy installation
- Diode polarised
- Low maintenance
- Very reliable
- EN54-3 Approved
- CPD compliant

AB360-06

6" Fire Bell For Indoor Use, 24Vdc - Swedish

Technische specificaties

Electrical

Power supply type	24 VDC
Operating voltage	19 to 28 VDC
Current consumption	20 mA
Number of connection terminals	2

Physical

Net weight	920 g
Colour	Rød
Mounting type	Montagem na base, Vægmontering
Mounting position	Parede
Mounting base	Profundo
Material	Stål

Environmental

Vandal proof	No
Environment	Indendør
IP rating	IP21C

Regulatory

Compliancy	CE, REACH, RoHS 3, WEEE
Certification	CPR

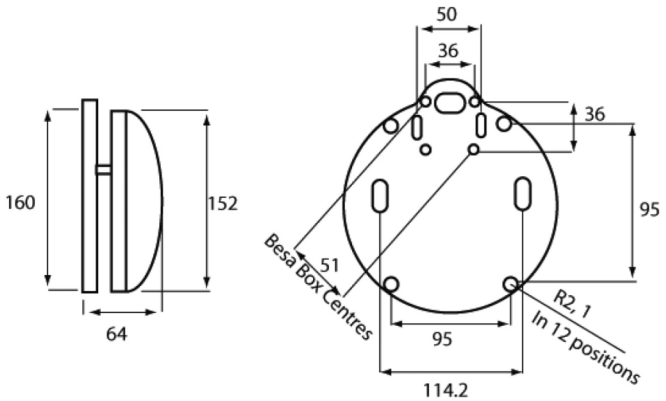

Als een bedrijf van innovatie behoudt Kidde Global Solutions zich het recht voor productspecificaties zonder kennisgeving te wijzigen. Ga voor de nieuwste productspecificaties online naar be.firesecurityproducts.com of neem contact op met uw verkoopvertegenwoordiger.

Last updated on 12 November 2026 - 18:57