TVD-VFM3

TruVision flush mount for S6 and M Series varifocal dome IP cameras

Overview

The TruVision TVD-VFM3 Flush Mount bracket can be used to install the Series 6 IP cameras TVD-5604H / TVD-5605H / TVD-5606H directly on a ceiling without leaving space between the camera and the surface of the ceiling.

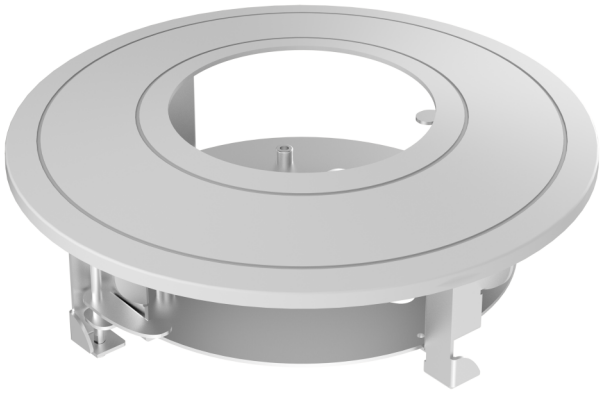

Details

- Steel and plastic materials with surface spray treatment
- Metal construction with magnetic trim ring
- Should only be used on a flat surface

TVD-VFM3

TruVision flush mount for S6 and M Series varifocal dome IP cameras

Technical specifications

General

Bracket type	Câmara
Support type	TruVision mini kupler
Bracket mounting part	Mounting bracket
Mount type	Montagem Embutida
Cable management	Yes

Physical

Physical dimensions	Ø 225 × 75.9 mm
Net weight	609 g
Colour	Cinzento (Pantone 428c)
Material	Stål

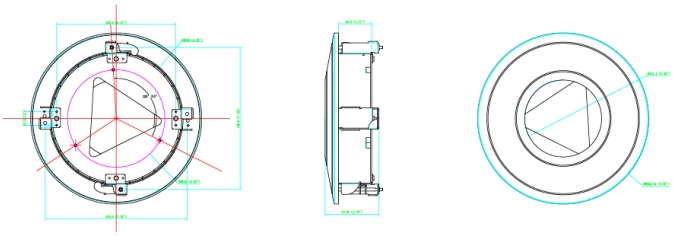

As a company of innovation, Kidde Global Solutions reserves the right to change product specifications without notice. For the latest product specifications, visit firesecurityproducts.com online or contact your sales representative.

Last updated on 13 August 2026 - 19:45