TVGP-P01-0401-PTZ-G

Câmara IP PTZ TruVision 4MP, H.265+, 400m IR, Zoom ótico 42x, IP67, IK10, Hi-PoE/24VAC

Overview

TVGP-P01-0401-PTZ-G is a Professional Pan Tilt Zoom camera from the TruVision P Series IP PTZ camera range. The camera's 4 megapixel resolution combined with extreme low light semsitivity, 42x optical zoom and 400m IR illumination ensures you capture the required level of detail at all times.

The camera is fully programmable, with up to 300 presets along with 8 patrol and preset tours.

The 8-zone privacy mask feature allows these cameras to block out sensitive areas. In addition, the variety of intelligence features and analytics adds substantial value and enhanced performance to any video system.

Video intelligence

The camera comes with a various built-in intelligent video features like line crossing detection, intrusion zone detection, region entry/exit detection, ANPR capabilities, face capture and comparison. Some of these intelligence features can be refined further by adding person/vehicle target classification to filter out unwanted events which automatically results in more efficient alarm event and storage management.

Technology

The camera features H.265+ compression to optimize its bandwidth and storage requirements. At the same time, H.264 which is also supported, allows the camera to be connected to legacy installations where needed.
ONVIF, PSIA and CGI command sets ensure that this camera can also be easily connected to virtually any video surveillance system.



Detalhes

- Resolução 4MP
- Zoom ótico 42x, zoom digital 16x
- Iluminação IR até 400 m
- Sensibilidade a luz super baixa
- Inteligência vídeo com classificação de alvo pessoa/veículo
- Captura de comparação de faces
- Captura ANPR
- Focagem rápida
- Compressão H.265+

TVGP-P01-0401-PTZ-G

Câmara IP PTZ TruVision 4MP, H.265+, 400m IR, Zoom ótico 42x, IP67, IK10, Hi-PoE/24VAC

Especificações técnicas

General

Technology	IP
Video standard	NTSC, PAL
OSD	Textüberlagerung
Image settings	BLC, De-Fog, HLC
Privacy masking	24 programmable polygon privacy masks, mask color or mosaic configurable
Software compatibility	TruVision Navigator, TVRmobile, Webbrowser

Camera

Sensor size	1/1.8"
Max. resolution	4 MPX
Sensor scan	Progressiv
Sensor type	CMOS
Shutter time	1/1 to 1/30,000 s

Lighting performance

WDR type	Echt-WDR
WDR	140 dB
Digital noise reduction	≥ 52 dB
Day/night	Echt Tag / Nacht
Motorized IR cut filter	Yes
Color sensitivity	Color: 0.001 Lux @ (F1.2, AGC ON), B/W: 0.0005 Lux @ (F1.2, AGC ON), 0 Lux with IR
Infrared (IR)	Yes
IR range	400 m
IR wavelength	850nm

Encoding

Video streams	3
Main stream compression	H.264, H.264+, H.265, H.265+
Sub stream compression	H.264, H.265, MJPEG
Third stream compression	H.264, H.265, MJPEG
Video bit rate	32 Kbps to 16 Mbps
Main stream resolutions	1280 x 720 (XVGA), 1280 x 960 (720p), 1920 x 1080 (1080p), 2560 x 1440
Sub stream resolutions	352 x 288 (CIF), 640 x 480 (VGA), 704 x 576 (4CIF)
Third stream resolutions	1280 x 720 (XVGA), 1280 x 960 (720p), 1920 x 1080 (1080p), 352 x 288 (CIF), 640 x 480 (VGA), 704 x 576 (4CIF)
Max. resolution @ fps	2560 x 1440 @ 25 fps

Lens

Focal length	6.0 mm to 252 mm - Horizontal FoV 56.6 to 1.7°, vertical FoV 33.7 to 0.9°, Diagonal FoV 63.4 to 1.9°
f-stop	Max. F1.2
Auto iris	Yes
Auto focus	Yes
Motorized zoom	Yes

Pan/tilt/zoom

Pan	Pan range: 360°, Pan speed: configurable from 0.1 to 210°/s, preset speed 280°/s
Tilt	Tilt range: -20 to 90° (auto-flip), Tilt speed: configurable from 0.1 to 150°/s, preset speed 250°/s
Optical zoom	42x
Digital zoom	16X
Preset positions	300
Preset tours	8 with 32 presets per tour
Shadow tours	4 with up to 10 minutes per tour
Supported PTZ protocols	Pelco-D, Pelco-P

Network

Network interface	RJ-45 10/100 Mbit / s selbstanpassende Ethernet-Schnittstelle
Integration	CGI, ISAPI, ONVIF Profil G, ONVIF Profil S, ONVIF Profile T, SDK
Supported network protocols	802.1x, Bonjour, DDNS, DHCP, DNS, ezDDNS, FTP, HTTP, HTTPS, ICMP, IGMP, IPv4, IPv6, NTP, PPPoE, Qos, RTCP, RTP, RTSP, SMTP, SNMP, TCP/IP, UDP, UPnP

Audio

Audio compression	G.711alaw, G.711ulaw, G.722.1, G.726, MP2L2, PCM
Audio in	1 input (line in), max. input amplitude: 2-2.4 Vpp, input impedance: 1 KΩ ± 10%
Audio out	1 output (line out), line level, output impedance: 600 Ω
Audio bit rate	64 Kbps (G.711)/16 Kbps (G.722.1)/16 Kbps (G.726)/32 to192 Kbps (MP2L2)

Alarm I/O

Alarm inputs	7
Alarm outputs	2

Storage

Local storage type	Built-in memory card slot, support microSD/SDHC/SDXC card
Max. SD card capacity	256 GB

Video intelligence

Alarm trigger	HDD error, HDD full, Inicio de sesión ilegal, Conflicto de direcciones IP, Red desconectada
ROI	8 fixed regions for each stream
Smart event	ANPR capture, Detección de excepción de audio, Face capture, Face comparison, Einbruchmeldetechnikserkennung, Detección de cruce de línea, Motion detection, Detección de objeto retirado, Erkennung eines Bereichseintritts, Detección de salida de región, Detección de equipaje desatendido
Intelligence options	Person/vehicle classification on VCA events
Intelligent tracking	Yes

TVGP-P01-0401-PTZ-G

Câmara IP PTZ TruVision 4MP, H.265+, 400m IR, Zoom ótico 42x, IP67, IK10, Hi-PoE/24VAC

Electrical

Operating voltage	24VAC, Hi-PoE
Power consumption	24 VAC: Max. 60 W, including max. 18 W for IR and max. 6 W for heater Hi-PoE: Max. 50 W, including max. 18 W for IR and max. 6 W for heater

Physical

Physical dimensions	Ø 266.6 × 410 mm Ø 10.5 × 16.14 in.
Net weight	Approx. 8 kg Approx. 17.64 lb.
Colour	Grau (Pantone 428c)
Material	Metall
Form Factor	PTZ
Mount	Corner mount (requires additional accessory), Abhänge-Halterung, Pole mount (requires additional accessory), Wall mount (requires additional accessory)

Environmental

Impact rating	IK10
Operating temperature	-40 to 70 °C -40 to 158 °F
Relative humidity	95% or less non-condensing
IP rating	IP67

Regulatory

Compliancy	CE, EMC, FCC, RCM, REACH, RoHS 3, UKCA, UL, WEEE

Produtos compatíveis

Categoria	Referência	Descrição
Brackets & Mounts	TVMI-PM	Suporte Montagem Pendente, 57 mm para TruVision Multi-imagem
Brackets & Mounts	TVMI-PM2	Suporte Montagem Pendente, 200mm para TruVision Multi-imagem
Brackets & Mounts	TVMI-PM3	Suporte Montagem Pendente, 500mm para TruVision Multi-imagem
Brackets & Mounts	TVMI-WM	Suporte Montagem Parede para câmara TruVision Multi-imagem
Brackets & Mounts	TVP-CMB-01	Suporte Canto TruVision com Caixa de Ligações para Câmars IP PTZ da Série P e M
Brackets & Mounts	TVP-PMB-01	TruVision Masthalterung mit Anschlussbox für IP-PTZ-Kameras der P- und M-Serie
Brackets & Mounts	TVP-WM-CM	Adaptador Montagem em Canto - TVP-WMB e GEA-102
Brackets & Mounts	TVP-WM-PM	Adaptador Montagem em Poste - TVP-WMB e GEA-102

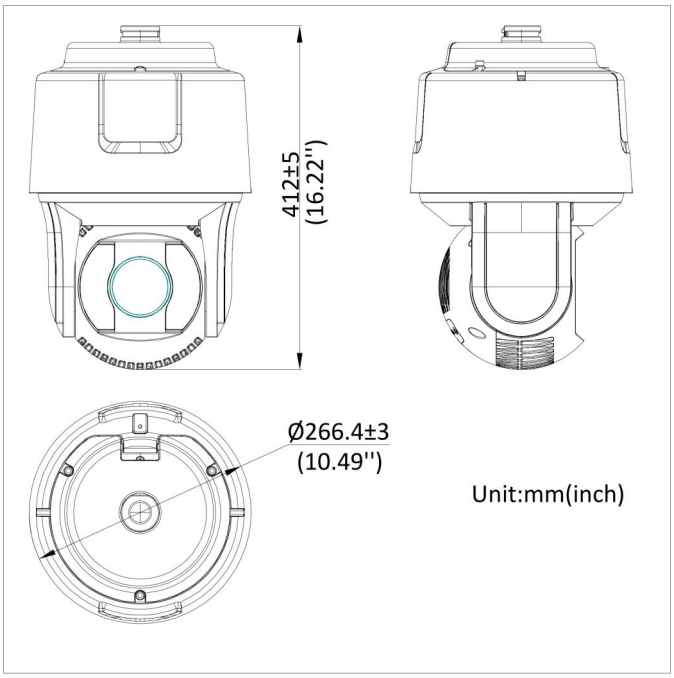

Como empresa de inovação, a Kidde Global Solutions reserva o direito de alterar as especificações do produto sem aviso prévio. Para obter informações sobre as especificações mais recentes do produto, visite pt.firesecurityproducts.com online ou contate o departamento comercial.

Last updated on 12 November 2026 - 18:57