TVGP-P01-0401-PTZ-G

TruVision 4MP IP PTZ camera, H.265+, 400 m IR, 42x optical zoom, IP67, IK10, Hi-PoE / 24 VAC

Overview

TVGP-P01-0401-PTZ-G is a Professional Pan Tilt Zoom camera from the TruVision P Series IP PTZ camera range. The camera's 4 megapixel resolution combined with extreme low light semsitivity, 42x optical zoom and 400 m IR illumination ensures you capture the required level of detail at all times.

The camera is fully programmable, with up to 300 presets along with 8 patrol and preset tours.

The 8-zone privacy mask feature allows these cameras to block out sensitive areas. In addition, the variety of intelligence features and analytics adds substantial value and enhanced performance to any video system.

Video intelligence

The camera comes with a various built-in intelligent video features like line crossing detection, intrusion zone detection, region entry/exit detection, ANPR capabilities, face capture and comparison. Some of these intelligence features can be refined further by adding person/vehicle target classification to filter out unwanted events which automatically results in more efficient alarm event and storage management.

Technology

The camera features H.265+ compression to optimize its bandwidth and storage requirements. At the same time, H.264 which is also supported, allows the camera to be connected to legacy installations where needed.
ONVIF, PSIA and CGI command sets ensure that this camera can also be easily connected to virtually any video surveillance system.



Details

- 4MP resolution
- 42x optical zoom, 16x digital zoom
- IR illumination up to 400 m
- Super low light sensitivity
- Video intelligence with person/vehicle target classification
- Face capture and comparison
- ANPR capture
- Rapid focus
- H.265+ compression

TVGP-P01-0401-PTZ-G

TruVision 4MP IP PTZ camera, H.265+, 400 m IR, 42x optical zoom, IP67, IK10, Hi-PoE / 24 VAC

Technical specifications

General

Technology	IP
Video standard	NTSC, PAL
OSD	Text Overlay
Image settings	BLC, De-Fog, HLC
Privacy masking	24 programmable polygon privacy masks, mask color or mosaic configurable
Software compatibility	TruVision Navigator, TVRmobile, Web Browser
Plugin-free web browser support	Google Chrome, Mozilla Firefox

Camera

Sensor size	1/1.8"
Max. resolution	4 MP
Sensor scan	Progressive
Sensor type	CMOS
Shutter time	1/1 to 1/30,000 s

Lighting performance

WDR type	True WDR
WDR	140 dB
Digital noise reduction	≥52 dB
Day/night	True Day/Night
Motorized IR cut filter	Yes
Color sensitivity	Color: 0.001 Lux @ (F1.2, AGC ON), B/W: 0.0005 Lux @ (F1.2, AGC ON), 0 Lux with IR
Infrared (IR)	Yes
IR range	400 m
IR wavelength	850 nm

Encoding

Video streams	3
Main stream compression	H.264, H.264+, H.265, H.265+
Sub stream compression	H.264, H.265, MJPEG
Third stream compression	H.264, H.265, MJPEG
Video bit rate	32 Kbps to 16 Mbps
Main stream resolutions	1280 x 720 (XVGA), 1280 x 960 (720p), 1920 x 1080 (1080p), 2560 x 1440
Sub stream resolutions	352 x 288 (CIF), 640 x 480 (VGA), 704 x 576 (4CIF)
Third stream resolutions	1280 x 720 (XVGA), 1280 x 960 (720p), 1920 x 1080 (1080p), 352 x 288 (CIF), 640 x 480 (VGA), 704 x 576 (4CIF)
Max. resolution @ fps	2560 x 1440 @ 25 fps

Lens

Focal length	6.0 to 252 mm - Horizontal FoV 56.6 to 1.7°, vertical FoV 33.7 to 0.9°, Diagonal FoV 63.4 to 1.9°
f-stop	Max. F1.2
Auto iris	Yes
Auto focus	Yes
Motorized zoom	Yes
Rapid focus	Yes
Zoom speed	Approx. 4.5 s

Pan/tilt/zoom

Pan	Pan range: 360°, Pan speed: configurable from 0.1 to 210°/s, preset speed 280°/s
Tilt	Tilt range: -20 to 90° (auto-flip), Tilt speed: configurable from 0.1 to 150°/s, preset speed 250°/s
Optical zoom	42x
Digital zoom	16x
Preset positions	300
Preset tours	8 with 32 presets per tour
Shadow tours	4 with up to 10 minutes per tour
Supported PTZ protocols	Pelco-D, Pelco-P

Network

Network interface	RJ-45 10/100 Mbps self-adaptive Ethernet interface
Integration	CGI, ISAPI, ONVIF Profile G, ONVIF Profile S, ONVIF Profile T, SDK
Supported network protocols	802.1x, Bonjour, DDNS, DHCP, DNS, ezDDNS, FTP, HTTP, HTTPS, ICMP, IGMP, IPv4, IPv6, NTP, PPPoE, QoS, RTCP, RTP, RTSP, SMTP, SNMP, TCP/IP, UDP, UPnP
Simultaneous live view	Up to 20 channels

Audio

Audio compression	G.711alaw, G.711ulaw, G.722.1, G.726, MP2L2, PCM
Audio in	1 input (line in), max. input amplitude: 2-2.4 Vpp, input impedance: 1 KΩ ± 10%
Audio out	1 output (line out), line level, output impedance: 600 Ω
Audio bit rate	64 Kbps (G.711)/16 Kbps (G.722.1)/16 Kbps (G.726)/32 to192 Kbps (MP2L2)

Alarm I/O

Alarm inputs	7
Alarm outputs	2

Storage

Local storage type	Built-in memory card slot, support microSD/SDHC/SDXC card
Max. SD card capacity	256 GB

TVGP-P01-0401-PTZ-G

TruVision 4MP IP PTZ camera, H.265+, 400 m IR, 42x optical zoom, IP67, IK10, Hi-PoE / 24 VAC

Video intelligence

Alarm trigger	HDD error, HDD full, Invalid login, IP address conflict, Network disconnected
ROI	8 fixed regions for each stream
Smart event	ANPR capture, Audio exception detection, Face capture, Face comparison, Intrusion detection, Line crossing detection, Motion detection, Object removal detection, Region entrance detection, Region exiting detection, Unattended baggage detection
Intelligence options	Person/vehicle classification on VCA events. Face capture: can detect up to 30 faces simultaneously. Supports detecting, capturing, grading, selecting of faces in motion, and generates the best face picture.
Intelligent tracking	Yes

Electrical

Operating voltage	24 VAC, Hi-PoE
Power consumption	24 VAC: Max. 60 W, including max. 18 W for IR and max. 6 W for heater Hi-PoE: Max. 50 W, including max. 18 W for IR and max. 6 W for heater

Physical

Physical dimensions	Ø 266.6 × 410 mm Ø 10.5 × 16.14 in.
Net weight	Approx. 8 kg Approx. 17.64 lb.
Colour	Grey (Pantone 428c)
Material	Metal
Form Factor	PTZ
Mount	Corner mount (requires additional accessory), Pendant mount (requires additional accessory), Pole mount (requires additional accessory), Wall mount (requires additional accessory)

Environmental

Impact rating	IK10
Operating temperature	-40 to 70°C -40 to 158°F
Relative humidity	95% or less, noncondensing
IP rating	IP67

Regulatory

Compliancy	CE, EMC, FCC, RCM, REACH, RoHS 3, UKCA, UL, WEEE

Compatible products

Category	Reference	Description
Brackets & Mounts	TVMI-PM	TruVision Multi-imager and P/M Series IP PTZ Pendant Mount bracket, 57 mm / 2.24"
Brackets & Mounts	TVMI-PM2	TruVision Multi Imager and P/M Series IP PTZ Pendant Mount bracket, 200 mm / 7.87”
Brackets & Mounts	TVMI-PM3	TruVision Multi Imager and P/M Series IP PTZ Pendant Mount bracket, 500 mm / 19.7”
Brackets & Mounts	TVMI-WM	TruVision Multi-imager and P/M Series IP PTZ camera Wall Mount
Brackets & Mounts	TVP-CMB-01	TruVision corner mount with connection box for P and M Series IP PTZ cameras
Brackets & Mounts	TVP-PMB-01	TruVision pole mount with connection box for P and M Series IP PTZ cameras

Compatible products

Category	Reference	Description
Brackets & Mounts	TVP-WM-CM	TruVision PTZ dome corner mount adapter
Brackets & Mounts	TVP-WM-PM	TruVision PTZ dome pole mount adapter

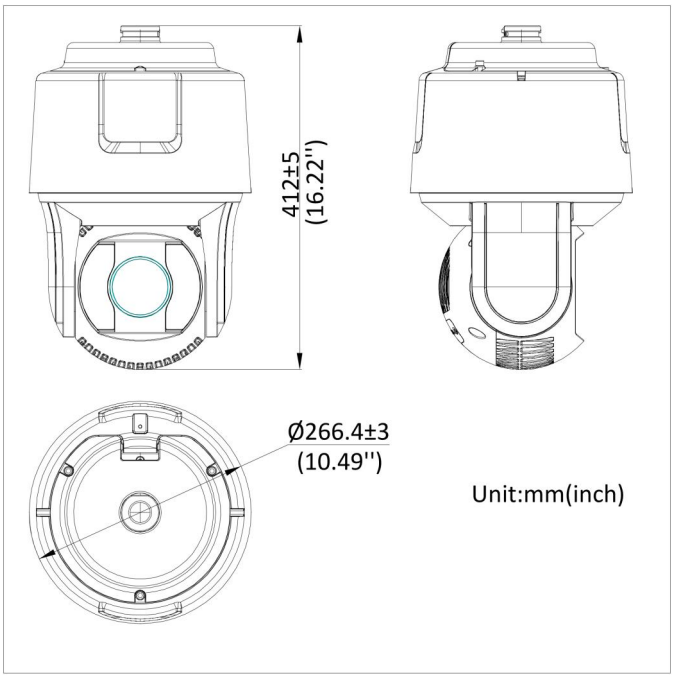

As a company of innovation, Kidde Global Solutions reserves the right to change product specifications without notice. For the latest product specifications, visit firesecurityproducts.com online or contact your sales representative.

Last updated on 24 August 2026 - 15:07