TVD-CB9

TruVision Cup Base for S7 outdoor dome camera

Overview

The TVD-CB9 cup base can be used in combination with mounting brackets TVD-SNB, TVD-PPB and TVD-CBW

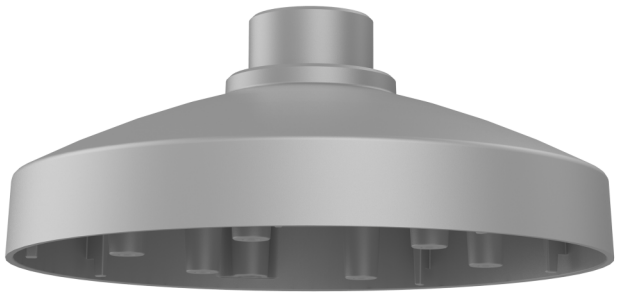

Dettagli

- Compatible with camera brackets TVD-SNB, TVD-PPB, TVD-CBW
- For use with S7 outdoor dome cameras TVD-5715, TVD-5716, TVD-5717, TVD-5718, TVD-5719, TVD-5720, TVD-5721

TVD-CB9

TruVision Cup Base for S7 outdoor dome camera

Specifiche tecniche

General

Bracket type	Caméra
Support type	TruVision mini kupler
Bracket mounting part	Coupe de base
Mount type	Vedhæng montering, Vægmontering

Physical

Physical dimensions	Ø 155 mm Ø 6.1 in.
Net weight	230 g 0.50 lb.
Colour	Gris (Pantone 428c)
Material	Aluminium

Environmental

Environment	Indendør, Udendørs

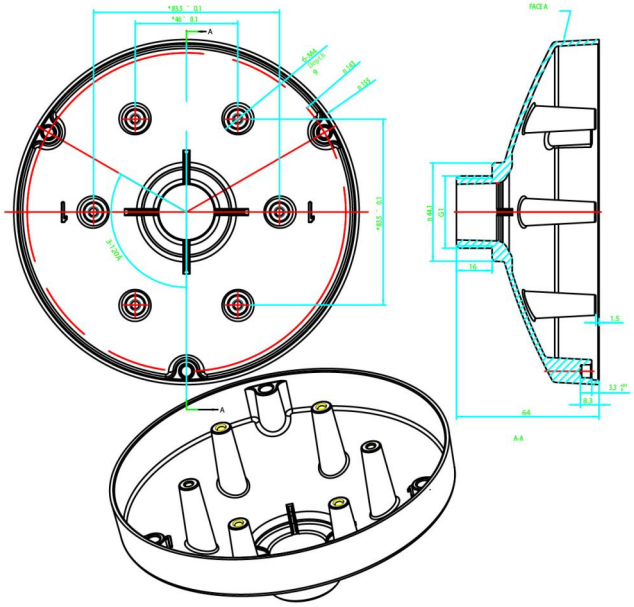

In quanto azienda in continua innovazione, Kidde Global Solutions si riserva il diritto di modificare le specifiche del prodotto senza preavviso. Per avere informazioni sempre aggiornate, visita it.firesecurityproducts.com online o contatta il tuo riferimento commerciale.

Last updated on 12 November 2026 - 18:57