S30-1SLC/B-20

SFP-Port Gigabit-Single Fiber GBIC Transceiver, TX: 1490 nm \ RX: 1310 nm, 20 km, Single Mode

Overview

The KGS Fire & Security transceiver module is specifically designed to accommodate high-performance optical fiber, including integrated duplex data link over single mode. Compliant with the SFP Multisource Agreement (MSA), these transceiver modules feature hot-plug capability for easy installation without interrupting host equipment operating online. The SFP transceiver can install into KGS Fire & Security switch products with 100Base-FX or 1000Base-SX/LX SFP interface.



Details

- SFP multi-source agreement compliant
- Data rate 1.25Gbps
- Class 1 laser safety standard IEC 60825 compliant
- 1(single) Fiber to be deployed together with S30-1SLC/A-20
- LC connector
- Low power dissipation
- Plug-and-play capability for easy installation
- Hot Pluggable
- 0ºC to +50ºC operation temperature
- TTL signal detect indicator
- Single power supply 3.3V
- Comply with the IEEE 802.3ab

S30-1SLC/B-20

SFP-Port Gigabit-Single Fiber GBIC Transceiver, TX: 1490 nm \ RX: 1310 nm, 20 km, Single Mode

Technical specifications

General

Category	SFP
Port type	Einzelner Modus
No. of fibers	1
Port speed	Gigabit
Wavelength	1310 nm, 1490 nm
Maximum distance	20 km
Connector	LC
TX / RX wavelenght	1490 nm / 1310 nm
PHY type	1000BX20-D
Power (dBm)	-8 to -2
RX Sen. (dBm)	-23
Power budget	15
Reliability (MTBF)	>50,000 hrs @ 25°C

Electrical

Operating voltage	3.3 VDC
AS/NZS CISPR 22	2006

Physical

Physical dimensions	59 x 15 x 12.4 mm (2.20 x 0.59 x 0.49 in.) (W x D x H)
Net weight	18 g (0.6 oz)

Environmental

Operating temperature	0 to +50°C
Storage temperature	-40 to 85°C
Relative humidity	5 to 95% noncondensing

Transmitter Electro-Optical Interface

EMI	EN 55022 CLASS A:2006+A1 : 2007 / EN61000-3-2:2006 / EN61000-3-3: 1995+A1:2001+A2:2005
Optical output power	-8 dBm (min.), -2 dBm (max.)
Power budget	15
Receiver	-23 dBm

Regulatory

	IEEE 802.3ab Fast Ethernet Standard
	Class 1 laser product complies with EN 60825-1

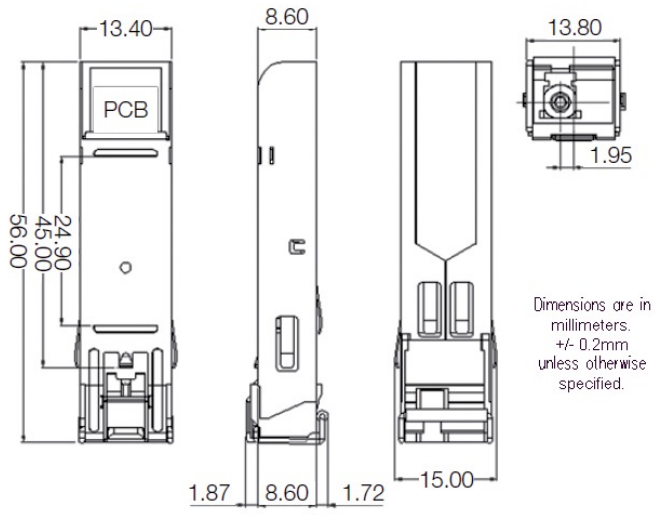

As a company of innovation, Kidde Global Solutions reserves the right to change product specifications without notice. For the latest product specifications, visit firesecurityproducts.com online or contact your sales representative.

Last updated on 16 June 2026 - 15:24