# TVD-SNB-BB

**TruVision TVD-SNB back box, 4-directional conduit, indoor & outdoor**

## Overview

TVD-SNB-BB TruVision Back Box can be used together with either TruVision TVD-SNB or TVD-M2-WM wall-mount bracket.

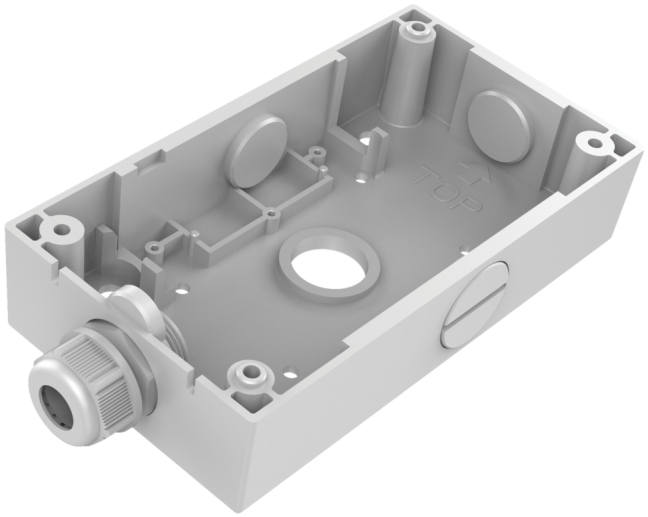


## Details

- Suitable for the TruVision wall brackets
- TruVision back box
- Aluminum alloy

# TVD-SNB-BB

## TruVision TVD-SNB back box, 4-directional conduit, indoor & outdoor

## Technical specifications

### General

| | |
|---|---|
| Bracket type | Telecamera |
| Support type | TruVision mini kupler |
| Bracket mounting part | Box di connessione |
| Mount type | Montaggio a superficie |

### Physical

| | |
|---|---|
| Physical dimensions | 182 x 99.5 x 42 mm |
| Net weight | 485 g |
| Colour | Grigio (Pantone 428c) |
| Material | Aluminium |

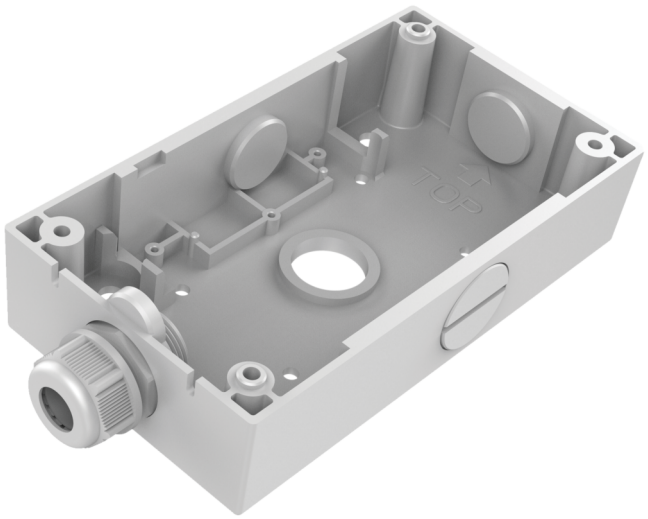


As a company of innovation, Kidde Global Solutions reserves the right to change product specifications without notice. For the latest product specifications, visit firesecurityproducts.com online or contact your sales representative.

Last updated on 27 August 2026 - 18:40