TVGP-P02-0401-PTZ-G

TruVision 4MP IP PTZ camera, H.265+, 300m IR, 25x zoom, Super Low Light, IP67, IK10, NEMA 4X, Hi-PoE/36VDC

Powerful optical performance

The 4MP 25× PTZ camera is built around a large 1/1.8" progressive scan CMOS sensor, delivering sharp, high-resolution images with excellent color reproduction. Designed for demanding outdoor environments, the camera captures fine details across wide areas while maintaining consistent image quality. Equipped with a 25× optical zoom lens and 16× digital zoom, the camera enables precise monitoring of distant targets without loss of detail. Its excellent low-light performance ensures clear and usable images even in challenging lighting conditions, making it ideal for 24/7 surveillance applications.

Advanced image processing and stability

The camera features 150 dB WDR technology to provide clear imaging in scenes with strong backlight or high contrast. Rapid focus, Smart Pan-Tilt correction, and a built-in gyroscope work together to deliver stable, accurate images, even during fast PTZ movements or in windy conditions.

Video intelligence

Rich intelligent functions are supported, including perimeter detection, face recognition, person and vehicle classification, and ANPR/traffic intelligence. These advanced analytics enhance situational awareness, improve response times, and reduce false alarms in complex environments.

Rugged design for outdoor applications

Designed for harsh conditions, the camera offers IP67-rated water and dust resistance, IK10 vandal protection, and NEMA 4X corrosion resistance. This robust construction makes it suitable for long-term deployment in environments such as roads, airports, ports, parks, railways, and large public venues.



Szczegóły

- 4MP resolution
- 25x optical zoom, 16x digital zoom
- IR illumination up to 300 m
- Extreme low light sensitivity
- Rich intelligence features: perimeter detection, face recognition, person/vehicle detection, ANRP/Traffic intelligence
- IP67 water and dust resistant, IK10 vandal proof, NEMA 4X corrosion resistant
- ANPR capture
- Rapid focus
- H.265+ compression

TVGP-P02-0401-PTZ-G

TruVision 4MP IP PTZ camera, H.265+, 300m IR, 25x zoom, Super Low Light, IP67, IK10, NEMA 4X, Hi-PoE/36VDC

Specyfikacja techniczna

General

Technology	IP
Video standard	NTSC, PAL
OSD	Text Overlay
Image settings	BLC, De-Fog, HLC, ROI (Region Of Interest)
Privacy masking	24 programmable polygon privacy masks, mask color or mosaic configurable
Video output	BNC Composite
Software compatibility	TruVision Navigator, TVRmobile, Web Browser
Image stabilization	EIS (Built-in gyroscope to improve EIS performance)
TurboDry	Yes, manual operation

Camera

Sensor size	1/1.8"
Max. resolution	4 MP
Sensor scan	Progressive
Sensor type	CMOS
Total Pixels (H x V)	2688 × 1520
Digital S/N ratio	≥52dB
Shutter time	1/1 to 1/30,000 s

Lighting performance

WDR type	True WDR
WDR	150 dB
Digital noise reduction	≥52 dB
Day/night	True Day/Night
Motorized IR cut filter	Yes
Color sensitivity	Color: 0.0005 Lux @ (F1.6, AGC ON), B/W: 0.0001 Lux @ (F1.6, AGC ON), 0 Lux with IR
Infrared (IR)	Yes
IR range	300 m

Encoding

Video streams	3
Main stream compression	H.264, H.264+, H.265, H.265+
Sub stream compression	H.264, H.265, MJPEG
Third stream compression	H.264, H.265, MJPEG
Video bit rate	32 Kbps to 16 Mbps
Main stream resolutions	1280 x 720 (XVGA), 1920 x 1080 (1080p), 2560 x 1440, 2688 x 1520
Sub stream resolutions	352 x 288 (CIF), 640 x 480 (VGA), 704 x 576 (4CIF)
Third stream resolutions	1280 x 720 (XVGA), 1280 x 960 (720p), 1920 x 1080 (1080p), 352 x 288 (CIF), 640 x 480 (VGA), 704 x 576 (4CIF)
Max. resolution @ fps	2560 x 1440 @ 25 fps
High frame rate support	1920 x 1080 @100 fps, 2688 x 1520 @50 fps, 2560 x 1440 @50 fps, 1280 x 720 @50 fps. High framerate support is only supported in Monitoring VCA mode.

Lens

Focal length	5.9 to 147.5 mm - Horizontal Field of View: 58.8 to 3.1°, Vertical Field of View: 34.4 to 1.7°, Diagonal Field of View: 66.0 to 3.5°
f-stop	Max. F1.6
Auto iris	Yes
Auto focus	Yes
Motorized zoom	Yes
Focus	Auto, semi-auto, manual, rapid focus
Zoom speed	Approx. 4.5 s

DORI

Detection	25 px/m, Distance 2034.5 m (6674.87 ft)
Observation	63 px/m, 807.3 m (2648.62 ft)
Recognition	125 px/m, 406.9 m (1334.97 ft)
Identification	250 px/m, 203.4 m (667.32 ft)

Pan/tilt/zoom

Pan	Pan range: 360°, Pan speed: configurable from 0.1 to 550°/s, preset speed 550°/s
Tilt	Tilt range: -20 to 90° (auto-flip), Tilt speed: configurable from 0.1 to 300°/s, preset speed 300°/s
Endless pan	Yes
Optical zoom	25x
Digital zoom	16x
Preset positions	300
Preset tours	8 with 32 presets per tour
Supported PTZ protocols	Pelco-D, Pelco-P

Network

Network interface	RJ-45 10/100 Mbps self-adaptive Ethernet interface
Integration	CGI, ISAPI, ONVIF Profile G, ONVIF Profile S, ONVIF Profile T, SDK
Supported network protocols	802.1x, Bonjour, DDNS, DHCP, DNS, ezDDNS, FTP, HTTP, HTTPS, ICMP, IGMP, IPv4, IPv6, NTP, PPPoE, QoS, RTCP, RTP, RTSP, SMTP, SNMP, TCP/IP, UDP, UPnP

Audio

Audio compression	AAC, G.711, G.711alaw, G.722.1, G.726, MP2L2, PCM
Audio in	1 input (line in), max. input amplitude: 2-2.4 Vpp, input impedance: 1 KΩ ± 10%
Audio out	1 output (line out), line level, output impedance: 600 Ω
Audio bit rate	64 Kbps (G.711), 16 Kbps (G.722.1), 16 Kbps (G.726), 32 to 192 Kbps (MP2L2), 16 to 64 Kbps (AAC-LC)

Alarm I/O

Alarm inputs	7
Alarm outputs	2

TVGP-P02-0401-PTZ-G

TruVision 4MP IP PTZ camera, H.265+, 300m IR, 25x zoom, Super Low Light, IP67, IK10, NEMA 4X, Hi-PoE/36VDC

Storage

Local storage type	Built-in memory card slot, support microSD/SDHC/SDXC card
Max. SD card capacity	1 TB

Video intelligence

Alarm trigger	HDD error, HDD full, Invalid login, IP address conflict, Network disconnected
ROI	8 fixed regions for each stream
Smart event	Audio exception detection, Face capture, Face comparison, Intrusion detection, Line crossing detection, Motion detection, Object removal detection, Region entrance detection, Region exiting detection, Unattended baggage detection
Intelligence options	Person/vehicle classification on VCA events. Face capture: can detect up to 30 faces simultaneously. Supports detecting, capturing, grading, selecting of faces in motion, and generates the best face picture.
Intelligent tracking	Yes
Face capture	Detects up to 30 faces simultaneously.
Multi-Target-Type detection	Supports simultaneous detection and capture of person, face and vehicle.
Face comparison	Up to 10 face libraries with max. 30,000 faces for each library and 150,000 faces in total. Recognizes face identity via face modeling, grading and comparing to those against face library. Supports face library encryption
ANPR/Traffic	Supports license plate recognition of vehicles and motorcycles (only in checkpoint scenario) Support vehicle attribute detection, including vehicle type, color, brand, driving direction, etc. Support vehicle and non-vehicle counting Blocklist and allowlist: up to 10,000 records LPR countries/regions: 4 areas (Europe, Middle East, Asia-Pacific, Africa), more than 124 countries/regions. Accuracy (Under ideal recommended installation and lighting conditions): License plate recognition rate ≥98%, Capture rate ≥99%, Driving direction accuracy rate ≥98%. Vehicle Capture Speed: Front installation in checkpoint scenario: up to 120 km/h. Side installation: up to 80 km/h Capture Mode: License Plate and Vehicle Mode, Vehicle Priority Mode
Smart tracking	Manual tracking, auto-tracking
Object tracking	Supports person arming. When the device detects the armed defined person in the monitoring scene, it triggers alarms, and tracks and captures the target. During tracking, the target location and other related information are uploaded.

Electrical

Operating voltage	36 VDC, PoE 802.3 bt
Power consumption	Max. 52 W, incl. max. 6.4 W for IR and max. 8 W for heater

Physical

Physical dimensions	Ø 215 × 297 mm
Net weight	Approx. 5 kg
Colour	Dark grey
Material	Metal
Form Factor	PTZ
Mount	Corner mount (requires additional accessory), Pendant mount (requires additional accessory), Pole mount (requires additional accessory), Wall mount (requires additional accessory)

Environmental

Impact rating	IK10
Operating temperature	-40 to 70°C -40 to 158°F
Internal heater	Yes
Relative humidity	95% or less, noncondensing
IP rating	IP67
Anti-corrosion protection	NEMA 4X (NEMA 250-2018)
Protection	Lightning Protection, Surge Protection and Voltage Transient Protecti on,±6kV Line to Gnd, ±3kV Line to Line, IEC61000-4-5

Regulatory

Compliancy	CE, EMC, REACH, RoHS, UKCA, WEEE

Pan/ tilt / zoom

Proportional pan	Yes
Preset freezing	Yes
Park action	Preset, Preset tour
3D positioning	Yes
PTZ status display	Yes
Scheduled task	Preset, Preset scan, dome reboot, dome adjust, aux output
Power-off memory	Yes

Wyroby zgodne

Kategoria	Odniesienie	Opis
Brackets & Mounts	TVP-CMB-02	TruVision PTZ Corner Mount bracket
Brackets & Mounts	TVP-PMB-02	TruVision PTZ Pole Mount bracket
Brackets & Mounts	TVP-PMB-03	TruVision PTZ Pendant Mount bracket
Brackets & Mounts	TVP-WMB-01	TruVision PTZ Wall Mount bracket

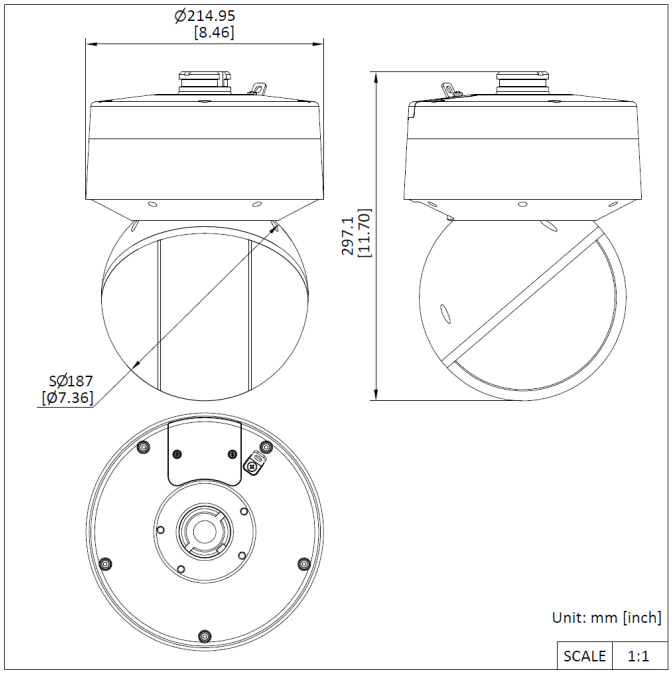

ARITECH

Będąc firmą innowacyjną, Kidde Global Solutions zastrzega sobie prawo do zmian w specyfikacji wyrobów bez uprzedzenia. W celu uzyskania najnowszych specyfikacji prosimy o wizytę na stronach pl/firesecurityproducts.com lub kontakt z przedstawicielem handlowym.

Last updated on 12 November 2026 - 18:57