TVGP-M01-0403-PTZ-G

Dome PTZ IP Truvision 4MPX, 32X, IR 200m , Hi-PoE/24VAC, Staffa a muro Inclusa.



Overview

TVGP-M01-0403-PTZ-G is a Pan Tilt Zoom IP camera for use in both indoor and outdoor installations. The camera's 4 megapixel resolution combined with excellent low light capabilities, 32x optical zoom and 200m IR illumination ensures you capture the required level of detail at all times.

The camera is fully programmable, with up to 300 presets along with 8 patrol and preset tours.

The 8-zone privacy mask feature allows these cameras to block out sensitive areas. In addition, the variety of intelligence features and analytics adds substantial value and enhanced performance to any video system.

Video intelligence

The camera comes with a various built-in intelligent video features like line crossing detection, intrusion zone detection, region entry/exit detection and more. Some of these intelligence features can be refined further by adding person/vehicle classification to filter out unwanted events which automatically results in more efficient alarm event and storage management.

Technology

The camera features H.265+ compression to optimize its bandwidth and storage requirements. At the same time, H.264 which is also supported, allows the camera to be connected to legacy installations where needed.
ONVIF, PSIA and CGI command sets ensure that this camera can also be easily connected to virtually any video surveillance system.

Dettagli

- 4MP resolution
- 32x optical zoom, 16x digital zoom
- IR illumination up to 200 m
- Video intelligence with person/vehicle classification options
- Built-in speaker for audio alarms
- Flashing white alarm LED
- H.265+ compression
- Wall mount bracket included

TVGP-M01-0403-PTZ-G

Dome PTZ IP Truvision 4MPX, 32X, IR 200m , Hi-PoE/24VAC, Staffa a muro Inclusa.

Specifiche tecniche

General

Technology	IP
Video standard	NTSC, PAL
OSD	Text Overlay
Privacy masking	24 programmable polygon privacy masks, mask color or mosaic configurable
Software compatibility	TruVision Navigator, TVRmobile, Web Browser

Camera

Sensor size	1/1.8"
Max. resolution	4 MP
Sensor scan	Progressive
Sensor type	CMOS
Shutter time	1/1 to 1/30,000 s

Lighting performance

WDR type	True WDR
WDR	120 dB
Day/night	True Day/Night
Motorized IR cut filter	Yes
Color sensitivity	Color: 0.005 Lux @ (F1.5, AGC ON), B/W: 0.001 Lux@(F1.5, AGC ON), 0 Lux with IR
Infrared (IR)	Yes
IR range	200 m
IR wavelength	850nm

Encoding

Video streams	3
Main stream compression	H.264, H.264+, H.265, H.265+
Sub stream compression	H.264, H.265, MJPEG
Third stream compression	H.264, H.265, MJPEG
Video bit rate	32 to 16 Mbps
Main stream resolutions	1280 x 720 (XVGA), 1280 x 960 (720p), 1920 x 1080 (1080p), 2560 x 1440
Sub stream resolutions	352 x 288 (CIF), 640 x 480 (VGA), 704 x 576 (4CIF)
Third stream resolutions	1280 x 720 (XVGA), 1280 x 960 (720p), 1920 x 1080 (1080p), 352 x 288 (CIF), 640 x 480 (VGA), 704 x 576 (4CIF)
Max. resolution @ fps	2560 x 1440 @ 25 fps

Lens

Focal length	5.9 mm to 188.8 mm - Horizontal FoV 50.8 to 2.6°, vertical FoV 29.4 to 1.5°, Diagonal FoV 57.4 to 3°
f-stop	Max. F1.6
Auto iris	Yes
Auto focus	Yes
Motorized zoom	Yes

Pan/tilt/zoom

Pan	Pan speed: configurable from 0.1° to 160°/s; preset speed: 240°/s
Tilt	Tilt speed: configurable from 0.1° to 120°/s, preset speed 200°/s
Endless pan	Yes
Auto flip	Yes
Optical zoom	32x
Digital zoom	16x
Preset positions	300
Preset tours	8
Shadow tours	4

Network

Network interface	RJ-45 10/100 Mbps self-adaptive Ethernet interface
Integration	CGI, ISAPI, ONVIF Profile G, ONVIF Profile S, ONVIF Profile T, SDK
Supported network protocols	802.1x, Bonjour, DDNS, DHCP, DNS, ezDDNS, FTP, HTTP, HTTPS, ICMP, IGMP, IPv4, IPv6, NTP, PPPoE, RTCP, RTP, RTSP, SNMP, TCP/IP, UPnP

Audio

Audio compression	G.711a, G.711alaw, G.711ulaw, G.722.1, G.726, MP2L2, PCM
Audio in	1 input (line in), max. input amplitude: 2-2.4 vpp, input impedance: 1 kΩ ± 10%
Audio out	1 output (line out), line level, output impedance: 600 Ω and built-in speaker
Audio bit rate	64 Kbps (G.711)/16 Kbps (G.722.1)/16 Kbps (G.726)/32-192 Kbps (MP2L2)

Alarm I/O

Alarm inputs	2
Alarm outputs	1 alarm output and white flash alarm LED

Storage

Local storage type	Built-in memory card slot, support microSD/SDHC/SDXC card
Max. SD card capacity	256 GB

Video intelligence

Alarm trigger	HDD error, HDD full, Invalid login, IP address conflict, Network disconnected
ROI	8 fixed regions for each stream
Smart event	Audio exception detection, Face capture, Intrusion detection, Line crossing detection, Motion detection, Object removal detection, Region entrance detection, Region exiting detection, Unattended baggage detection
Intelligent tracking	Yes

Electrical

Operating voltage	24VAC, Hi-PoE
Power consumption	Max. 42 W (including max. 18 W for IR and max. 10 W for heater)

TVGP-M01-0403-PTZ-G

Dome PTZ IP Truvision 4MPX, 32X, IR 200m , Hi-PoE/24VAC, Staffa a muro Inclusa.

Physical

Physical dimensions	Ø 220 × 363.3 mm Ø 8.66 × 13.91 in.
Net weight	Approx. 5.0 kg Approx. 11.03 lb.
Colour	Grey (Pantone 428c)
Material	Aluminium
Form Factor	PTZ
Mount	Corner mount (requires additional accessory), Pendant mount (requires additional accessory), Pole mount (requires additional accessory), Wall mount

Environmental

Operating temperature	-30 to 65 °C -22 to 149 °F
Relative humidity	90% or less non-condensing
IP rating	IP66

Regulatory

Compliancy	CE, EMC, FCC, RCM, REACH, RoHS 3, UKCA, UL, WEEE

Prodotti compatibili

Categoria	Riferimento	Descrizione
Brackets & Mounts	TVMI-PM	Support de montage suspendu, 57 mm / 2,24". pour caméra TruVision Multi-imager.
Brackets & Mounts	TVMI-PM2	TruVision Multi Imager forlængerrør til brug for TVS-5101 kamera, 200 mm / 7.87”
Brackets & Mounts	TVMI-PM3	TruVision Multi Imager forlængerrør til brug for TVS-5101 kamera, 500 mm / 19.7”
Brackets & Mounts	TVP-CMB-01	Support de fixation d'angle TruVision avec boîtier de connexion pour les caméras IP PTZ des séries P et M
Brackets & Mounts	TVP-PMB-01	Support de montage sur mât TruVision avec boîtier de raccordement pour les caméras IP PTZ des séries P et M
Brackets & Mounts	TVP-WM-CM	Staffa per fissaggio ad angolo per dome TruVision analogiche ed IP, da utilizzare con la staffa TVP-WMB.
Brackets & Mounts	TVP-WM-PM	Staffa per fissaggio a palo per dome PTZ della linea TruVision analogiche ed IP, da utilizzare con la staffa TVP-WMB.

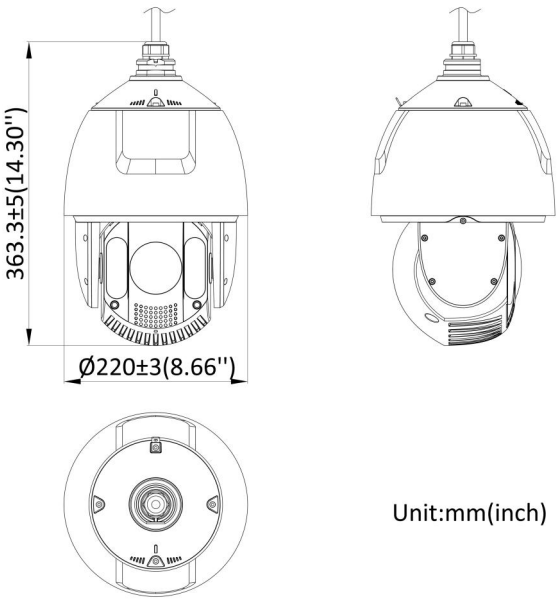

In quanto azienda in continua innovazione, Kidde Global Solutions si riserva il diritto di modificare le specifiche del prodotto senza preavviso. Per avere informazioni sempre aggiornate, visita it.firesecurityproducts.com online o contatta il tuo riferimento commerciale.

Last updated on 12 November 2026 - 18:57