STENTO-1023321330

Haut-parleur à cornet IP, haut volume avec microphone (ZIPS-HHO)

Overview

The ZIPS-HHO IP speaker integrates with TruVision Navigator 9.2 (and newer) over the ONVIF protocol. This integration creates added value for video surveillance projects for perimeters, logistics centers, parking lots, retail stores, etc.
IP speakers can be installed along cameras to play event-based messages or sound messages can be triggered by an operator. This can prevent theft/vandalism and can deter criminal behavior, while keeping staff at a safe distance.

This Zenitel IP speaker is equipped with a Class D amplifier, powered via PoE, and designed with a long horn shape to enhance both sound pressure level (SPL) and directivity. This design allows the speaker to deliver up to 123 dBA for speech signals (6 dB crest factor). It is ideal for environments where the speakers need to be positioned at a distance from the listener, and where installation space is not a primary concern, for example, in perimeter protection along a fenceline.
The ZIPS-HHO can also be instrumental for applications where high background noise must be overcome in the installation space, such as industrial areas, and transport applications.
Every speaker has a build-in memory that can store audio messages.

TruVision Navigator integration

Our VMS TruVision Navigator (version 9.2 and newer) supports the following features for Zenitel IP speakers:
 - Discover the IP speakers on the network
- An operator can start playback for sound messages
- Grouping of IP speakers is supported via the Logical View feature
- IP Speakers are added in the Event-Actions function, so that the desired audio message can be played for a camera event
- IP speakers can be shown on a map and sound messages can be played from the map
- As of version 9.4, the push-to-talk feature was added for supported IP speakers, enabling simultaneous communication across multiple speakers directly from the application.



Détails

- Haut-parleur IP à utiliser avec TruVision Navigator (à partir de la version 9.2)
- Mémoire pour stocker les messages audio
- Peut être utilisé à l'intérieur et à l'extérieur
- Alimenté par PoE
- Amplificateur de classe D intégré de 30 W
- Niveau de pression acoustique de 123 dB à 1 m

STENTO-1023321330

Haut-parleur à cornet IP, haut volume avec microphone (ZIPS-HHO)

Spécifications techniques

Electrical

Power supply type	PoE
Power consumption	Max. 12 W
Frequency	240 to 10000 Hz

Physical

Physical dimensions	170 x 315 x 350 mm (HxWxD)
Net weight	2.49 kg
Colour	Grey (RAL 7035)
Mounting type	Ceiling mount, Wall mount
Mounting position	Ceiling, Wall
Housing material	ABS plastic

Environmental

Operating temperature	-40 to +70°C
Relative humidity	<95% not condensing
Environment	Indoor, Outdoor
IP rating	IP66

Regulatory

Compliancy	CE, FCC

Audio

Internal speaker amplifier	30 W class D
Max. sound pressure level at 1 meter	123 dBA
Audio line out/induction loop signal	8 Ohm speaker out (powershare)
Switchable Mic/line in	1 (mic/professional line in level)

Network

Ethernet connection	RJ 45
Network protocols	IPv4 (with DiffServ), SIP, TCP, UDP, HTTPS, TFTP, RTP, DHCP, SNMP, ONVIF, CCoIP® , NTP, Power over Ethernet (IEEE 802.3 a-f), Network Access Control (IEEE 802.1x)
Management and operation	HTTP/HTTPS (web configuration); DHCP and static IP
IP address information	Speaks IP address after system boot

Inputs/Outputs

General inputs/outputs	1
Outputs	12 mA as LED drivers
Changeover relay (NO+NC+COM)	48V nominal, max. 100VDC, 70VAC

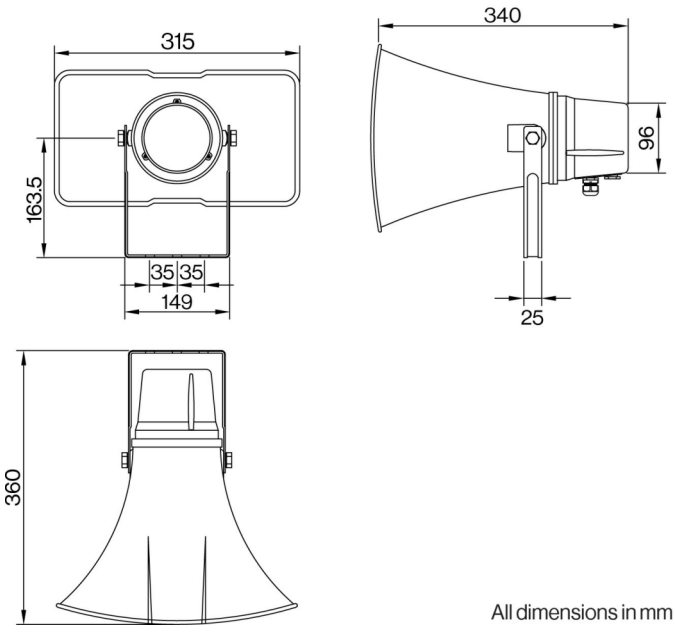

All dimensions in mm

En tant que société d'innovation, Kidde Global Solutions se réserve le droit de modifier les spécifications des produits sans préavis. Pour les dernières spécifications du produit, visitez le site web fr.firesecurityproducts.com ou contactez votre représentant commercial.

Last updated on 12 November 2026 - 18:57