AB360

6" Fire Bell, indoor use, 24 VDC

General

The AB360 is a 150 mm (6 inch) internal bell with English "FIRE ALARM" text, designed as an acoustic fire annunciator. Thanks to its small dimensions and overall design, it is ideal for in-door installation. The AB360 uses a 24 VDC supply and with the advantage of having very low current consumption, makes them compatible with most fire alarm systems.

Applications

The AB360 is ideal for installing on any site, but are specifically good for installing on sites where a great number of bells are required. Becuase of the low current consumption, excessive power supplies can be avoided.

Construction

Designed for ease of installation, the AB360 features a robust steel gong. This ensures the reliable generation, of the universally recognizable fire alarm bell sound.



Details

- Low current consumption
- Universally recognisable sound
- Diode polarised
- EN54-3 Approved

AB360
6" Fire Bell, indoor use, 24 VDC

Technical specifications

General

Compatibility	Conventional 24 VDC notification circuits

Electrical

Power supply type	24 VDC
Operating voltage	19 to 28 VDC
Current consumption	20 mA
Number of connection terminals	2
Cable size	< 2.5 mm²
Cable specification	2 Core

Sounder

Output level	95 dB(A) at 1 m

Physical

Physical dimensions	160 x 64 mm (⌀ x d) 150 mm (6") bell diameter
Net weight	920 g
Colour	Red
Mounting type	Base mount, Wall mount
Mounting position	Wall
Mounting base	Deep
Material	Steel

Environmental

Vandal proof	No
Operating temperature	-10 to +55°C
Environment	Indoor
IP rating	IP21C

Regulatory

Compliancy	CE, REACH, RoHS 3, WEEE
Certification	CPR
Standards	EN54-3

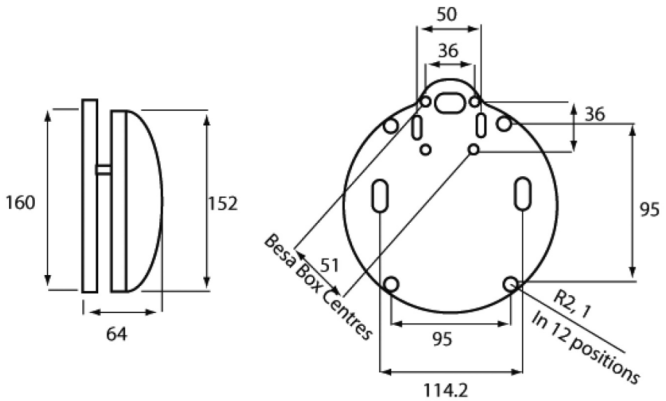

KIDDE GLOBAL SOLUTIONS

As a company of innovation, Kidde Global Solutions reserves the right to change product specifications without notice. For the latest product specifications, visit firesecurityproducts.com online or contact your sales representative.

Last updated on 16 October 2026 - 11:46